VIS-FMIL (MIL)

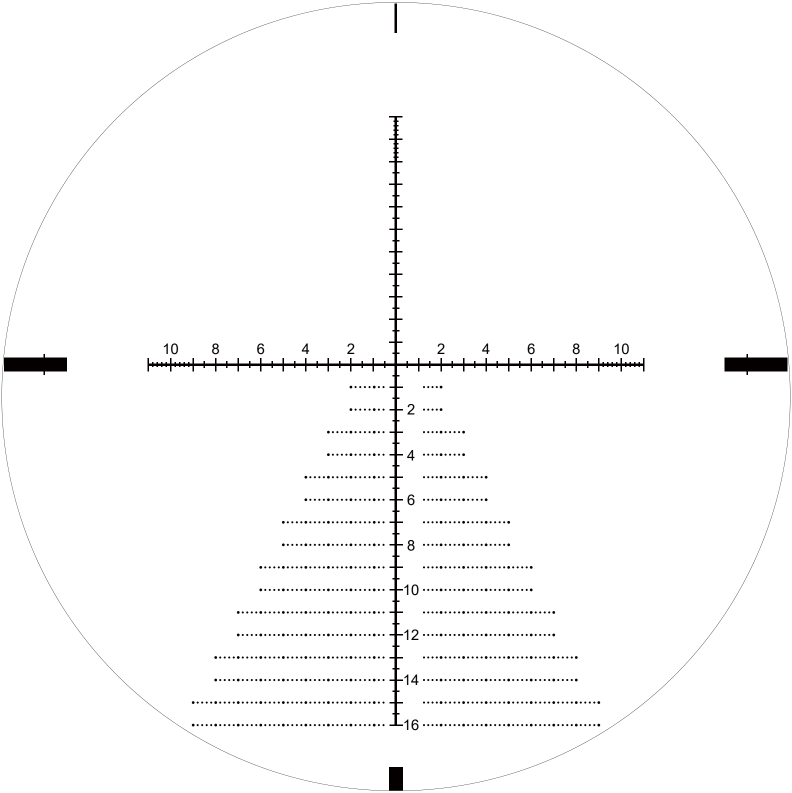
10
8
6
4
2
2
4
6
8
10
2
4
6
8
10
12
14
16

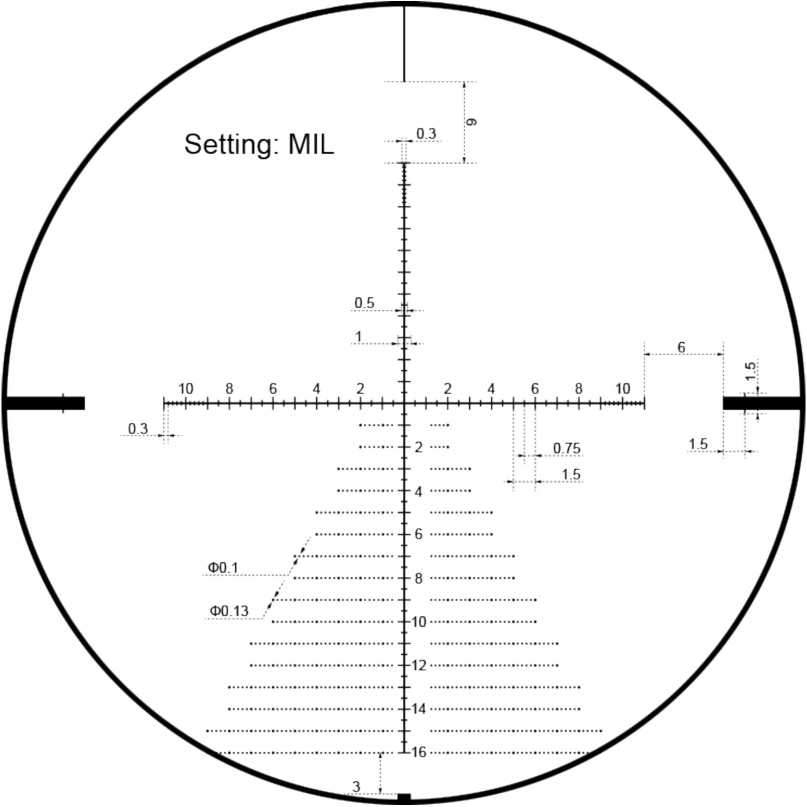
Setting: MIL
9
0.3
0.5
1
6
1.5
10
8
6
4
2
2
4
6
8
10
0.3
0.75
1.5
1.5
2
4
6
Φ0.1
8
Φ0.13
10
12
14
16
3

MDL (MIL)

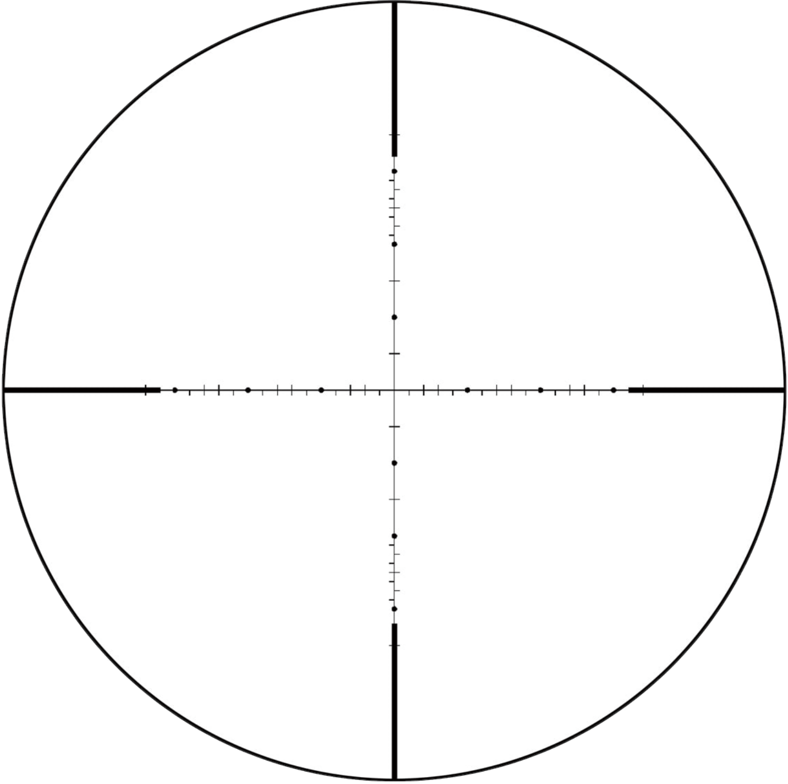

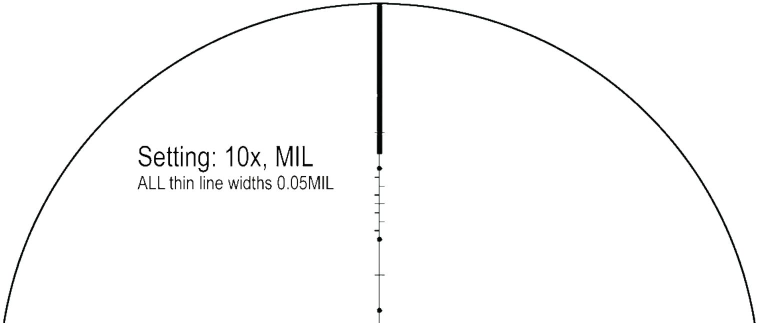

Setting: 10x, MIL
ALL thin line widths 0.05MIL

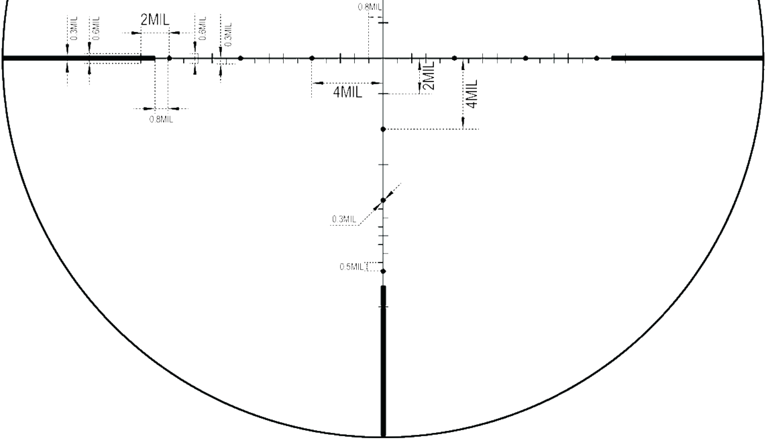
0.8MIL
0.3MIL
0.6MIL
2MIL
0.6MIL
0.3MIL
4MIL
2MIL
4MIL
0.8MIL
0.3MIL
0.5MIL

VDM-2 (MIL)

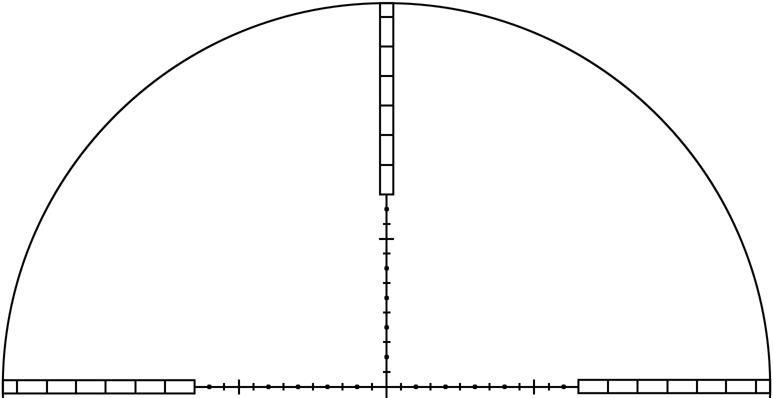

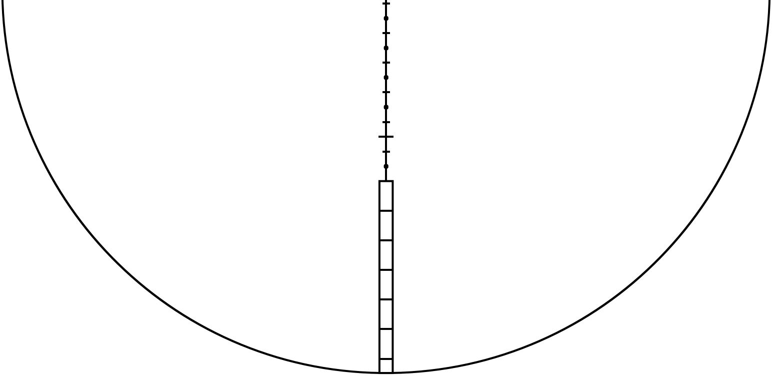

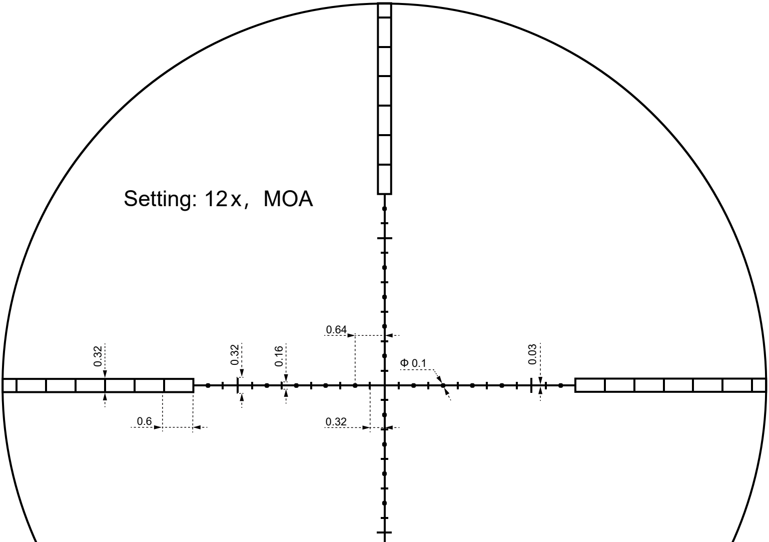
Setting: 12x，MOA
0.64
0.32
0.32
0.16
Φ 0.1
0.03
0.6
0.32

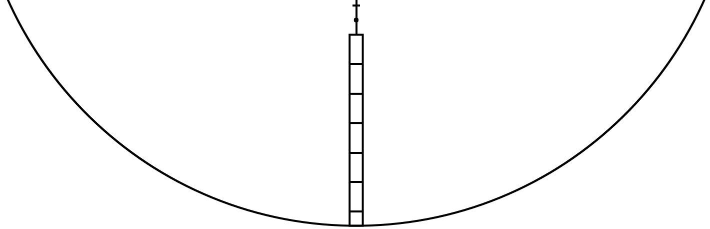

VOR-7 MIL

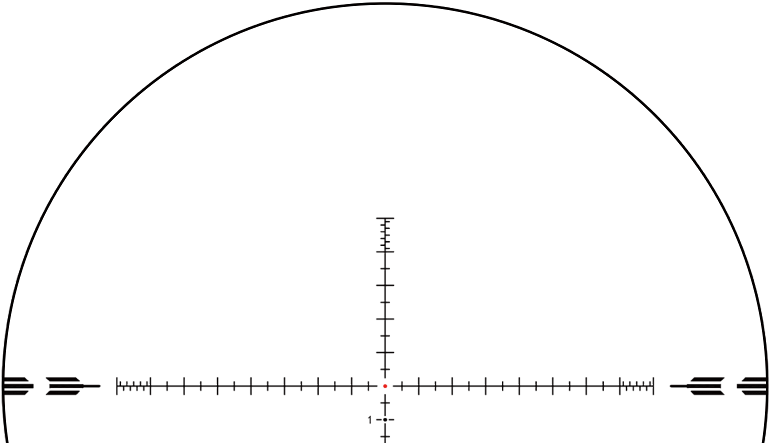

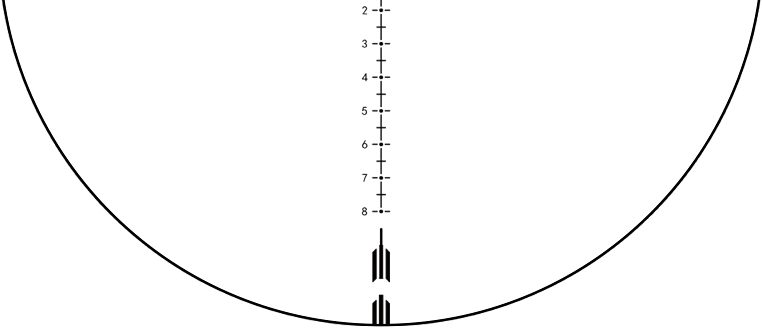

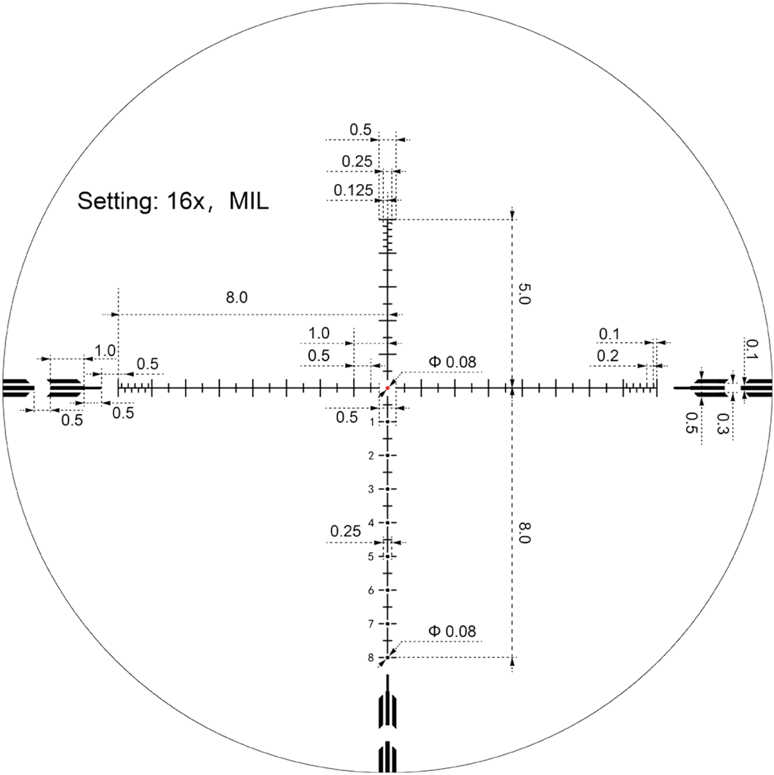
Setting: 16x，MIL
0.5
0.25
0.125
5.0
8.0
1.0
0.5
Φ 0.08
0.1
0.2
0.1
1.0
0.5
0.5
0.5
0.5
0.5
0.3
1
2
3
4
0.25
5
6
7
8.0
Φ 0.08
8